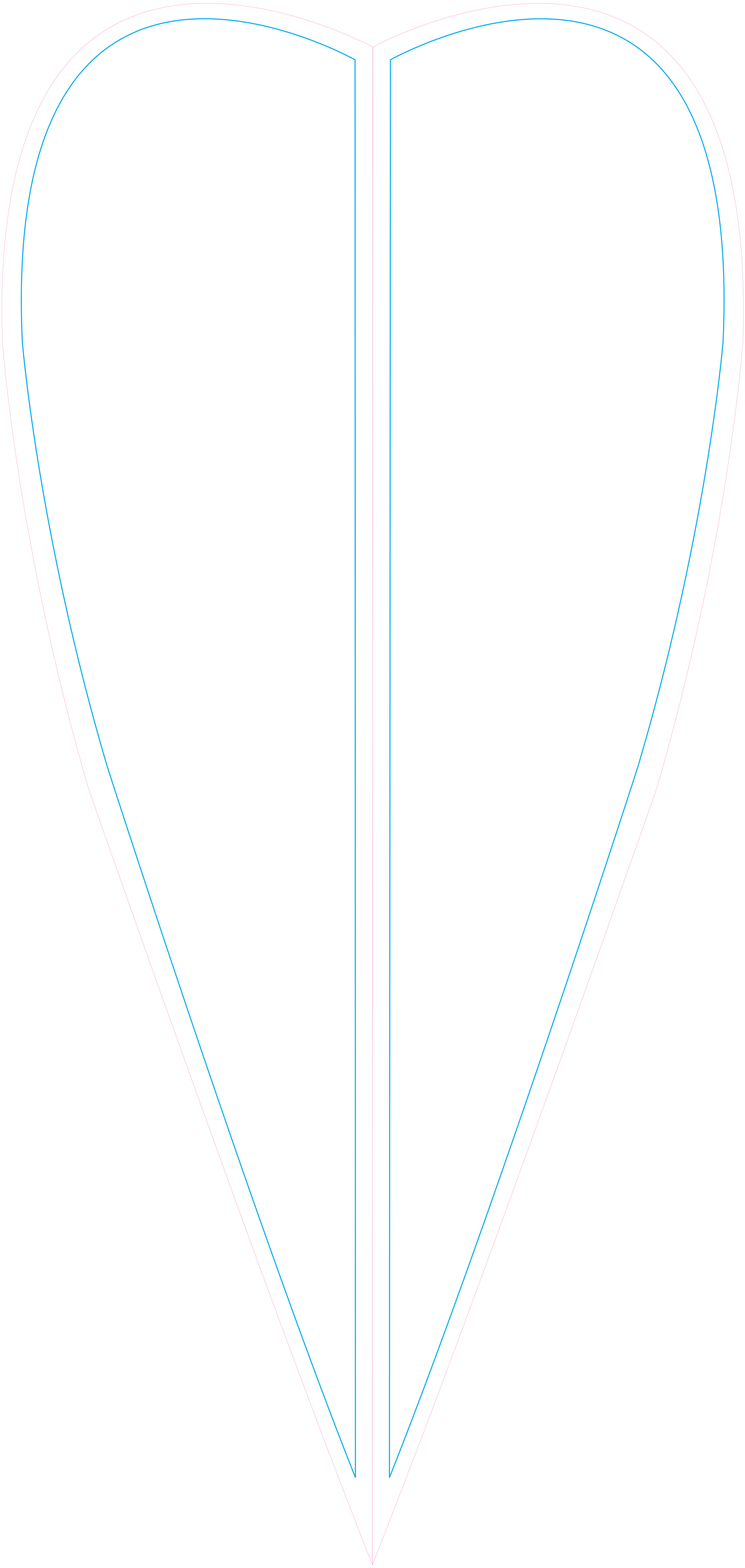

TEARDROP X-LARGE DOUBLE SIDED

SAFE AREA
All text and logos need to be inside safe area.

FINISHED SIZE
This line indicates the final finished size. Use this line to create a clipping path of your final artwork.

ARTWORK GUIDELINES

- All fonts must be converted to outline
- All images must be embedded
- Artwork needs to be in CMYK mode
  Please note that PMS colors will be converted to CMYK which can cause colors to shift.
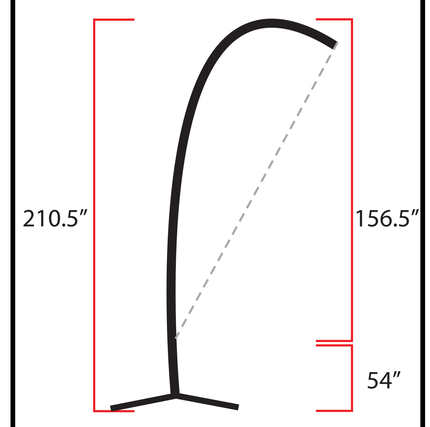
  We recommend a resolution of 200 ppi at 100% scale for all raster graphics.